City Council Agenda Item Report

FROM: Scott Herbert – Public Works Superintendent

MEETING DATE: May 27, 2025

SUBJECT: Front-End Loader Replacement

DESCRIPTION:

Background

The Department of Public Works currently operates a 1999 Caterpillar 938G front-end loader with over 9,000 operating hours. The equipment is experiencing increasing mechanical wear and reliability issues. Given its critical role in snow removal, storm response, roadway maintenance, and general material handling, replacement is necessary to ensure continued operational efficiency and service delivery.

Equipment Evaluation

To identify the most suitable replacement, staff demoed and evaluated the following comparable models:

- **Caterpillar 938**
- **Volvo L90H**
- **Hyundai HL940**

Each machine was assessed based on performance, operator feedback, dealer support, and long-term value. After comprehensive evaluation, the Caterpillar 938 was determined to be the most favorable option due to:

- Operational familiarity – Minimizes training time for staff already experienced with our current front-end loader.
- Strong dealer support – Reliable parts availability and service from Michigan CAT.
- Durability and performance – Caterpillar equipment has a proven track record in municipal operations.
- Operational efficiency – Since the proposed model has a quick-attach front-end, it's possible to increase efficiency by use changeable attachments.

Purchase vs. Lease Analysis

Staff also evaluated the financial implications of purchasing versus leasing the equipment. While leasing may offer lower up-front costs, the analysis concluded that an outright purchase provides better value over time, with the following advantages:

- Lower total cost of ownership
- No interest or finance fees
- Predictable long-term budgeting
- Full ownership and resale/trade-in value at end of life

Procurement Method

The Caterpillar 938 is available through the State of Michigan's MiDEAL purchasing program, which offers competitive, pre-negotiated pricing without the need for separate bidding.

- Vendor: Michigan CAT
- Equipment: Caterpillar 938 Front-End Loader
- Contract: MiDEAL #240000000165
- **Total Purchase Price: $273,292.50**

Recommendation

Staff recommends the approval of the purchase of one (1) Caterpillar 938 front-end loader from Michigan CAT in the amount of **$273,292.50**, through the State's MiDEAL purchasing program.

BUDGET ACTION REQUIRED:
This is a budgeted item with funds available in the Motor Pool fund.

COMMITTEE/COMMISSION REVIEW:
N/A

LEGAL REVIEW:
N/A

SAMPLE MOTION:
Motion to approve the purchase of one Caterpillar 938 Wheel-Loader from Michigan CAT in the amount of $273,292.50, through the State's MiDEAL purchasing program.

Feb 18, 2025

CITY OF SAUGATUCKMCAT
PO BOX 86
Saugatuck, Michigan 49453

Dear Scott Herbert

Thank you for this opportunity to quote Caterpillar products for your business needs. We are pleased to quote the following for your purchase consideration.

MIDEAL CONTRACT # 240000000165

One (1) New Caterpillar Model: 938 Wheel Loader - Small with all standard equipment in addition to the additional specifications listed below:

MACHINE SPECIFICATIONS

938 14A WHEEL LOADER
ENVIRONMENT, MEDIUM DEBRIS
WEATHER, COLD START 120V
STANDARD LIFT, COUPLER READY
DIFFERENTIAL, OPEN REAR
HYDRAULICS, 3V
LINES, AUX 3RD, STD LIFT
HYDRAULICS, STANDARD
LIGHTS, AUX, LED, PREMIUM
LIGHTS, ROADING, LED, RH
CAB, STANDARD
AUTO LUBE
AIR CONDITIONING, R134A REF
PUSH START, PASSCODE SECURITY
SEAT, DELUXE, TILT AND TELE
CAMERA, REAR VIEW
MIRRORS, HEAT, ELEC ADJUST
STANDARD RADIO (12V), DUAL USB
STEERING WHEEL, STANDARD
JOYSTICK 3V, STEERING WHEEL
TIRES, 20.5R25 TI MXL * L3
FENDERS, STANDARD
CTWT, AGGREGAGE ,4431LBS, 8PCS
TOOLBOX AUX
RIDE CONTROL
FILM GP, AGGREGATE
JUMPER LINES, AUX 3RD, FUSION
QUICK COUPLER,FUSION,EXT DUTY
BUCKET-GP, 3.8 YD3, FUS, BOCE
C720 TINK CLAW

WARRANTY & COVERAGE

Standard Warranty:	Standard Warranty New CAT Machines - 12 Months Unlimited Hours Full Machine. * All standard warranties include travel time and mileage for the first six (6) months. Scheduled Oil Sampling is required during entire warranty period.
Extended Coverage:	938-60 MO/4000 HR POWERTRAIN + HYDRAULICS + TECH
CSA	2 YR 1,000HR CVA PARTS KIT

Sell Price	$273,292.50
Net Balance Due	$273,292.50
Ext Warranty	Included
Total Net Purchase Price	$273,292.50

Thank you for your interest in Dealership and Caterpillar products for your business needs. This quotation is valid for 30 days, after which time we reserve the right to re-quote. If there are any questions, please do not hesitate to contact me.

Sincerely,

Wesley Holt
Machine Sales Representative
Dealership
Wes.Holt@michigancat.com
616-890-9205

Cat® 938

Wheel Loader

Features:

CONFIGURED FOR SUCCESS

- Cat wheel loaders set the standard for productivity, fuel efficiency, operator comfort and low operating costs. The Cat 938 Small Wheel Loader features a high torque C7.1 engine that works in conjunction with an intelligent hydrostatic power train to deliver exceptional fuel efficiency. Meets U.S. EPA Tier 4 Final and EU Stage V emission standards, designed to manage itself so you can concentrate on your work. Extended service intervals to 1000 hours reduce fluid and filter use by up to 45% (compared to previous M Series models) while keeping operating cost low.

ENJOY ALL DAY COMFORT

- Have a seat in the new Cat small wheel loader and enjoy automatic temperature control, class leading sound levels, enhanced all-around visibility and low-effort joystick controls that move with you on a fully adjustable seat suspension. A large spacious operator environment combined with Caterpillar hydraulic cylinder damping and smooth predictable controls make this the most comfortable seat on your jobsite.
- An upgrade to multi-view camera and rear object detection gives you an extra eye on the jobsite while the new optional force feedback joystick steering keeps you feeling confident on those long shifts. The operator not present function helps to isolate the machine if you leave the environment; while seat belt notifications give you a gentle reminder to buckle up.

EFFICIENTLY POWERFUL

- Experience the difference with an intelligent hydrostatic power train and industry leading fuel savings through a lower maximum engine speed working in combination with a new auto engine RPM mode. This provides efficiency as standard with a boost in power when you need it. Optimize traction and minimize wheel slip with a new Auto Wheel Torque and Auto Differential Lock system tuned to provide peak performance while maximizing tire life and keeping operating costs low. Track your production and accurately hit your load targets with Cat Payload. 250 hours of Cat Payload demonstration will be included as standard with an optional subscription for extended use.

WORK MADE EASY

- Move more with the Caterpillar patented quick loading performance series buckets and optimized Z-bar linkage with enhanced forward visibility that combines the digging efficiency of a traditional Z-bar with tool carrier capabilities. The parallel lift and high tilt forces throughout the working range allow you to confidently handle loads with precise control.
- Multi-function work has never been easier with dedicated pumps for each system and a flow sharing implement valve governed by an intelligent power management system. Simultaneously lift, steer, and drive without compromise. Upgrade to autolube and tire pressure monitoring to make service easy and get to work quicker. Light the way with auto roading lights that come on at night fall.

CUSTOMIZE YOUR EXPERIENCE

- Meet your application requirements and individual preferences with Caterpillar industry first Hystat™ Operator Modes featuring four unique power train settings. Select classic torque converter for smooth rollout, conventional hystat for aggressive engine braking, an ice mode that maximizes your control on slippery underfoot, and an all new single pedal mode for simplified use.
- Fine tune machine performance with adjustments at your fingertips through programmable joysticks, soft touch buttons, and a new jog dial that works in combination with a standard touch screen display. Quickly recall attachment profiles that maintain key settings for versatility on the jobsite and optimal efficiency.

PURPOSE BUILT SPECIALITY MODELS

- Configure your Cat small wheel loader to meet the needs of your applications with a full range of options. The 938 features the following application specific arrangements that are configured for success:
  - Waste Handler
  - Aggregate Handler
  - Ag Handler (North America Only)

UPGRADES AND SERVICES

- Enjoy a full range of upgrades and accessories to configure your small wheel loader for a broader range of applications.
- Utilize readily available services and maintenance parts, including a range of self-service options (SSO) and dealer installed kits.

Purpose Built: Handlers Arrangements

A complete range of optional equipment and work tool attachments gives you the versatility to configure a handler package to be successful in your business. Get with Caterpillar to configure yours.

Aggregate Handler

- **Increased Payload:** Additional counterweight improves stability without reducing ground clearance or departure angle to maximize performance.
- **Long Life Sand and Gravel Buckets:** Performance series buckets deliver higher fill factors and better material retention for significant productivity and fuel efficiency improvements. Buckets feature a long floor, open throat, curved side bars and additional serviceable wear plates including corner guards.
- **Protect your Power Train:** Increase your fording depth with optional elevated breathers. Remote mounted high on the machine for the front and rear axles and hydrostatic gear box. Allows settling pond cleanout without contamination.

Waste Handler

- **Guard Your Investment:** Choose from a complete range of optional guarding to protect your machine from the harsh environment of a waste handling application. Machine guarding is purpose built to protect the machine's major components.
- **Breathe Clean:** Maximize your engine life and extend filter cleaning intervals with a turbine pre-cleaner. Keep cool with a reversing fan to purge the single plane, widely spaced core cooling package and brush-less sealed alternator. Breathe clean with a powered pre-cleaner for the operator environment.
- **Maximize Tire Life:** Fine tune your wheel torque to match the underfoot conditions and maximize performance while extending tire life. Standard auto wheel torque and auto front differential lock are ideal for waste handling applications.

Specifications

Engine

Engine Model	Cat® C7.1*	
Performance Mode	Automatic	
Rated Gross Power		
Rated Engine Speed	1,800 rpm	
SAE J1995	143 kW	191 hp
SAE J1995 (DIN)	194 mph (PS)	
Rated Engine Power		
ISO 14396	140 kW	188 hp
ISO 14396 (DIN)	191 mhp (PS)	
Rated Net Power		
SAE J1349 at Minimum Fan Speed	138 kW	185 hp
ISO 9249 at Minimum Fan Speed	138 kW	185 hp
ISO 9249 (DIN) at Minimum Fan Speed	188 mhp (PS)	

*Meets U.S EPA Tier 4 Final, EU Stage V off-highway, and Japan 2014 emission standards.

- Advertised power is tested per the specified standard in effect at the time of manufacture.

Engine *(continued)*

Maximum Gross Torque		
Engine Speed	1,400 rpm	
SAE J1995	912 N·m	673 lbf-ft
ISO 14396	900 N·m	664 lbf-ft
Maximum Net Torque		
SAE J1349	889 N·m	656 lbf-ft
ISO 9249	892 N·m	658 lbf-ft
Displacement	427 in^3	7.01 L
Bore	4 in	105 mm
Stroke	5 in	135 mm

- Net power ratings are tested at the reference conditions for the specified standard and denote power available at the flywheel when engine is equipped with alternator, air cleaner, emission components and fan at specified speed.
- No derating required up to 3000 m (10,000 ft) altitude. Auto derate protects hydraulic and transmission systems.

Specifications *(continued)*

Buckets

Bucket Capacities	1.9-5.0 m^3	2.5-6.5 yd^3

Steering

Steering Cylinder		
Bore Diameter	80 mm	3.1 in
Rod Diameter	50 mm	2.0 in
Stroke	399 mm	15.7 in
Maximum Flow – Steering Pump	130 L/min	34 gal/min
Maximum Working Pressure – Steering Pump	24 130 kPa	3,500 psi
Steering Cycle Times (Full Left to Full Right)		
Minimum RPM: Pump Flow Limited	3.1 seconds	
Maximum RPM: 90 rpm Steering Wheel Speed	2.3 seconds	

Loader Hydraulic System

Maximum Flow - Implement Pump	190 L/min	50 gal/min
3rd Function Maximum Flow*	190 L/min	50 gal/min
4th Function Maximum Flow*	160 L/min	42 gal/min
Maximum Working Pressure – Implement Pump	28 000 kPa	4,061 psi
Relief Pressure – Tilt Cylinder	30 000 kPa	4,351 psi
3rd and 4th Function Maximum Working Pressure	28 000 kPa	4,061 psi
3rd and 4th Function Relief Pressure	30 000 kPa	4,351 psi
Lift Cylinder – Standard Lift Linkage:		
Bore Diameter	120 mm	4.7 in
Rod Diameter	65 mm	2.6 in
Stroke	789 mm	31.1 in
Tilt Cylinder – Standard Lift Linkage:		
Bore Diameter	150 mm	5.9 in
Rod Diameter	90 mm	3.5 in
Stroke	555 mm	21.9 in
Hydraulic Cycle Time:		
Raise (Ground Level to Maximum Lift)	5.5 seconds	
Dump (at Maximum Lift Height)	1.5 seconds	
Float Down (Maximum Lift to Ground Level)	2.7 seconds	
Total Cycle Time	9.7 seconds	

*3rd and 4th function flow is fully adjustable from 20% to 100% of maximum flow through the secondary display when equipped.

Service Refill Capacities

Fuel Tank	195 L	51.5 gal
Cooling System	30 L	7.9 gal
Engine Crankcase	20 L	5.3 gal
Transmission (gearbox)	8.5 L	2.2 gal
Axles:		
Front	35 L	9.2 gal
Rear	35 L	9.2 gal
Hydraulic System (including tank)	170 L	4.93 gal
Hydraulic Tank	90 L	23.8 gal
Diesel Exhaust Fluid (DEF) Tank	19 L	5 gal

- DEF used in Cat systems must meet the requirements outlined in the International Organization for Standardization (ISO) standard 22241-1:2019

Transmission

Forward and Reverse		
Range 1*	1-13 km/h	0.6-8 mph
Range 2	13 km/h	8 mph
Range 3	27 km/h	17 mph
Range 4	40 km/h	25 mph

*Creeper control allows maximum speed range adjustability from 1 km/h (0.6 mph) to 13 km/h (8 mph) in Range 1 through the secondary display when equipped. Factory default is 7 km/h (4.4 mph).

Tires

Standard Size:	
20.5 R25, radial (L-3)	
Other Choices Include:	
20.5 R25, radial (L-2)	17.5 R25, radial (L-2)
20.5 R25, radial (L-5)	17.5 R25, radial (L-3)
20.5-25 12PR (L-2)	17.5 R25, radial (L-5)
20.5-25 12PR (L-3)	550/65 R25 radial (L-3)
20.5-25 16PR (L-5)	Skidder/Agriculture
23.5 R25 (L-2)	23.5 R25 (L-3)

– Other tire choices are available. Contact your Cat dealer for details.
– In certain applications, the loader's productive capabilities may exceed the tire's tonnes-km/h (ton-mph) capabilities.
– Caterpillar recommends that you consult a tire supplier to evaluate all conditions before selecting a tire model.

Cab

Rollover Protective Structure (ROPS):	ISO 3471:2008
Falling Object Protective Structure (FOPS):	ISO 3449:2005 LEVEL II

Axles

Front	Fixed Locking differential (standard)
Rear	Oscillating ±11 degrees Open differential (standard) Limited slip differential (optional)

CONFIGURED FOR SUCCESS:

Machine upgrades, either as a do-it-yourself option or dealer installed.

Guards
- Windshield
- Tilt cylinder
- Lights
- Fender deflectors
- Drive shaft
- Hitch
- Steering cylinders
- Side power train
- Lower power train
- Crank case

Debris Management
- Reversing fan
- Sealed alternator
- Turbine engine precleaner
- Powered cab precleaner

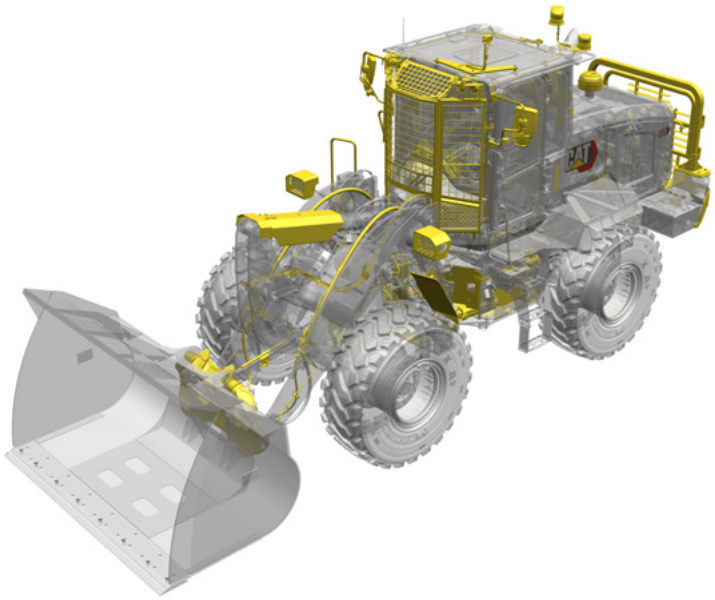

Operator Environment
- Bluetooth Key Fob
- Multi View Camera
- Internal Mirrors
- Washing Platform

Other Options
- Autolube
- Coupler: Fusion and ISO 23727:2009
- Auxiliary hydraulics: 3rd and 4th
- Window washing access
- Ride control
- Fenders: extended and full coverage
- Counterweights
- Rear object detection
- Blue Angel certification
- Beacon: Warning and Seatbelt
- LED auxiliary lights
- Cat Payload Printer
- Tire Pressure Monitoring
- Polycarbonate windshield
- 4-point harness

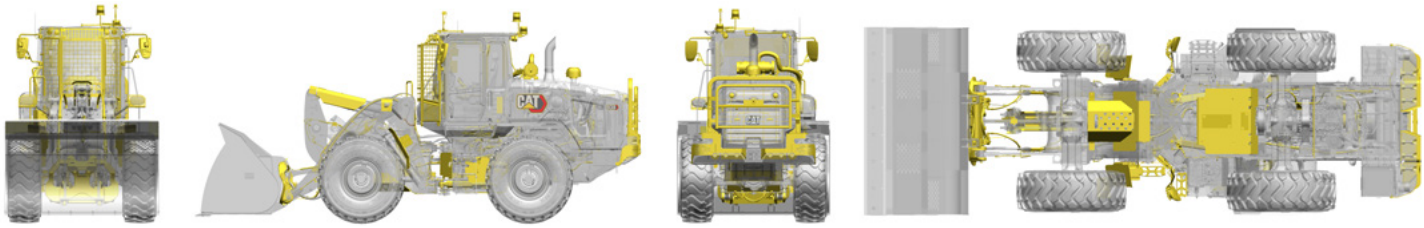

WORK TOOL ATTACHMENTS FOR EVERY JOB:

Get more from your machine with Cat attachments. Choose from a wide variety of options and tailor your machine to different tasks and conditions.

General Purpose Buckets

Light Material Buckets

High Dump Buckets

Pallet Forks

Construction Forks

Angle and Pickup Brooms

Snow Pushes

Snow Plows

Millyard Forks

Material Handling Arms

Dimensions and Operating Specifications (All dimensions are approximate. Dimensions vary with bucket and tire choice.)

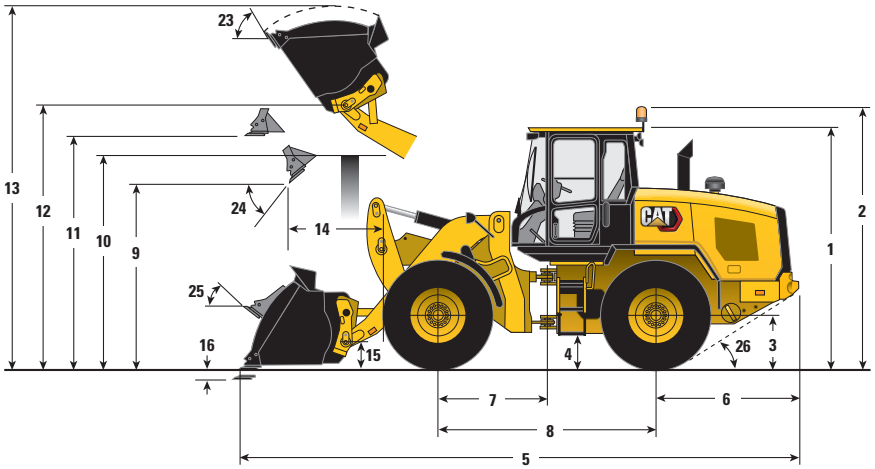

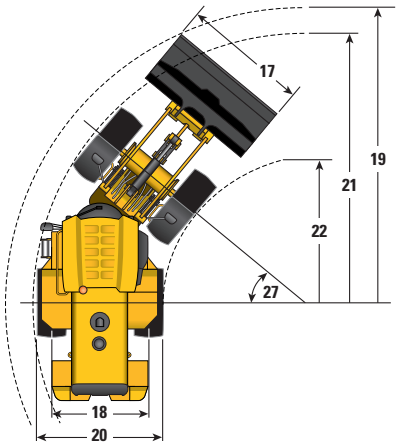

			Standard Lift		High Lift	
**	1	Height: Ground to Cab	3340 mm	10'11"	3340 mm	10'11"
**	2	Height: Ground to Beacon	3707 mm	12'2"	3707 mm	12'2"
**	3	Height: Ground to Axle Center	685 mm	2'3"	685 mm	2'3"
**	4	Height: Ground Clearance	386 mm	1'3"	386 mm	1'3"
*	5	Length: Overall	7656 mm	25'1"	8397 mm	27'7"
	6	Length: Rear Axle to Bumper	1968 mm	6'5"	1968 mm	6'5"
	7	Length: Hitch to Front Axle	1525 mm	5'0"	1525 mm	5'0"
	8	Length: Wheelbase	3050 mm	10'0"	3050 mm	10'0"
*	9	Clearance: Bucket at 45°	2834 mm	9'4"	3415 mm	11'2"
**	10	Clearance: Load over Height	3354 mm	11'0"	3561 mm	11'8"
**	11	Clearance: Level Bucket	3641 mm	11'11"	4222 mm	13'10"
**	12	Height: Bucket Pin	3969 mm	13'0"	4550 mm	14'11"
**	13	Height: Overall	5273 mm	17'4"	5853 mm	19'2"
*	14	Reach: Bucket at 45°	1146 mm	3'9"	1413 mm	4'8"
	15	Carry Height: Bucket Pin	394 mm	1'4"	612 mm	2'0"
**	16	Dig Depth	101 mm	4.0"	135 mm	5.3"
	17	Width: Bucket	2750 mm	9'0"	2750 mm	9'0"
	18	Width: Tread Center	2083 mm	6'10"	2083 mm	6'10"
	19	Turning Radius: Over Bucket	6120 mm	20'1"	6483 mm	21'3"
	20	Width: Over Tires	2693 mm	8'10"	2693 mm	8'10"
	21	Turning Radius: Outside of Tires	5546 mm	18'2"	5546 mm	18'2"
	22	Turning Radius: Inside of Tires	2843 mm	9'4"	2843 mm	9'4"
	23	Rack Angle at Full Lift	54°		53°	
	24	Dump Angle at Full Lift	49°		47°	
	25	Rack Angle at Carry	43°		48°	
	26	Departure Angle	33°		33°	
	27	Articulation Angle	40°		40°	
* Tipping Load – Straight (ISO 14397-1:2007)			11 829 kg	26,886 lb	8744 kg	19,277 lb
* Tipping Load – Full Turn (ISO 14397-1:2007)			10 112 kg	22,292 lb	7398 kg	16,310 lb
* Breakout			13 167 kg	29,028 lb	12 657 kg	27,903 lb
* Operating Weight			16 115 kg	35,528 lb	16 425 kg	36,210 lb

*Vary with bucket.

**Vary with tire.

Dimensions listed are for a machine configured with 2.5 m³ (3.2 yd³) general purpose Fusion™ bucket, bolt-on cutting edge, heavy counterweights, additional guarding, 80 kg (176 lb) operator and 20.5 R25 (L-3) XHA2 tires.

938 Environmental Declaration

The following information applies to the machine at the time of final manufacture as configured for sale in the regions covered in this document. The content of this declaration is valid as of the date issued; however, content related to machine features and specifications are subject to change without notice. For additional information, please see the machine's Operation and Maintenance Manual.

For more information on sustainability in action and our progress, please visit https://www.caterpillar.com/en/company/sustainability.

Engine

- The Cat® C7.1 engine meets U.S EPA Tier 4 Final, EU Stage V off-highway, and Japan 2014 emission standards.
- Cat diesel engines are required to use ULSD (ultra-low sulfur diesel fuel with 15 ppm of sulfur or less) or ULSD blended with the following lower-carbon intensity fuels** up to:
  - ✓ 20% biodiesel FAME (fatty acid methyl ester)*
  - ✓ 100% renewable diesel, HVO (hydrogenated vegetable oil) and GTL (gas-to-liquid) fuels

  Refer to guidelines for successful application. Please consult your Cat dealer or "Caterpillar Machine Fluids Recommendations" (SEBU6250) for details.

  **Engines with no aftertreatment devices can use higher blends, up to 100% biodiesel (for use of blends higher than 20% biodiesel, consult your Cat dealer).*

  ***Tailpipe greenhouse gas emissions from lower-carbon intensity fuels are essentially the same as traditional fuels.*

Air Conditioning System

- The air conditioning system on this machine contains the fluorinated greenhouse gas refrigerant R134a (Global Warming Potential = 1430). The system contains 1.9 kg (4.2 lb) of refrigerant which has a CO_2 equivalent of 2.717 metric tonnes (2.99 tons).

Paint

- Based on best available knowledge, the maximum allowable concentration, measured in parts per million (PPM), of the following heavy metals in paint are:
  - Barium < 0.01%
  - Cadmium < 0.01%
  - Chromium < 0.01%
  - Lead < 0.01%

Sound Performance

With cooling fan speed at 70% of maximum value:

Operator Sound Pressure Level (ISO 6396:2008) – 68 dB(A)*

Exterior Sound Power Level (ISO 6395:2008) – 101 dB(A)**

*Measurements were conducted with properly installed and maintained cab doors and windows closed.

**European Union Directive 2000/14/EC and UK Noise Regulation 2001 No. 1701.

Oils and Fluids

- Caterpillar factory fills with ethylene glycol coolants. Cat Diesel Engine Antifreeze/Coolant (DEAC) and Cat Extended Life Coolant (ELC) can be recycled. Consult your Cat dealer for more information.
- Cat Bio HYDO™ Advanced is an EU Ecolabel approved biodegradable hydraulic oil.
- Additional fluids are likely to be present, please consult the Operations and Maintenance Manual or the Application and Installation guide for complete fluid recommendations and maintenance intervals.

Features and Technology

- The following features and technology may contribute to fuel savings and/or carbon reduction. Features may vary. Consult your Cat dealer for details.
  - Tire Pressure Monitoring
  - Cat Production Measurement
  - Auto Wheel Torque Control
  - Auto Engine RPM
  - Extended Maintenance Intervals
  - Intelligent Hystat Transmission
  - Performance Series Buckets
  - Engine Idle Shutdown
  - Variable Displacement Pumps

Recycling

- The materials included in machines are categorized as below with approximate weight percentage. Because of variations of product configurations, the following values in the table may vary.

Material Type	Weight Percentage
Steel	64.27%
Iron	17.84%
Rubber	6.83%
Nonferrous Metal	2.99%
Other	2.36%
Fluid	1.76%
Plastic	1.24%
Uncategorized	1.07%
Mixed Metal	0.96%
Mixed-Metal and Nonmetal	0.67%
Mixed Nonmetallic	0.01%
Total	100.00%

- A machine with higher recyclability rate will ensure more efficient usage of valuable natural resources and enhance End-of-Life value of the product. According to ISO 16714:2008 (Earthmoving machinery – Recyclability and recoverability – Terminology and calculation method), recyclability rate is defined as percentage by mass (mass fraction in percent) of the new machine potentially able to be recycled, reused or both.

  All parts in the bill of material are first evaluated by component type based on a list of components defined by the ISO 16714:2008 and Japan CEMA (Construction Equipment Manufacturers Association) standards. Remaining parts are further evaluated for recyclability based on material type.

  Because of variations of product configurations, the following value in the table may vary.

  Recyclability – 96%

STANDARD EQUIPMENT

OPERATOR ENVIRONMENT
- 75 mm (3 in) retractable seatbelt
- Automatic temperature control
- Cab, enclosed ROPS/FOPS pressurized and sound suppressed
- Push to Start
- 8 Inch Touch Screen
- Jog Dial with screen control
- Programmable Joystick
- Cup holders
- External mirrors with lower parabolic
- Ground level cab door release
- Hydraulic control lockout
- Interior cab lighting, door
- Lunch box storage
- Operator Not Present system
- Radio ready speakers
- Rear window defrost, electric
- Seat mounted electronic implement controls, adjustable
- Sliding glass on side window
- Column mounted multi function control lights, wipers, turn signal
- Suspension seat, fabric
- Tilt steering wheel
- Tinted front glass
- Wet arm wiper/washer, 2-speed and intermittent, front
- Wet arm wiper washer, rear
- Mounting Provision
- Digital hour meter, odometer and tachometer
- Digital ground speedometer and direction indicator
- Engine coolant temperature gauge
- Fuel and diesel exhaust fluid levels
- Hydraulic oil temperature gauge

POWER TRAIN
- Cat C7.1 engine
- Auto idle shut down feature
- Auto Engine RPM
- Auto Differential Lock
- Tier 4 Final/EU Stage V compliant
- Turbocharged and aftercooled
- Filtered crankcase breather
- Diesel particulate filter
- Selective catalyst reduction
- Dry type air cleaner
- Coolant protection to –34 °C (–29 °F)
- Fuel priming pump, automatic
- Fuel water separator
- Differential lock in front axle
- Axle seal guards
- Enclosed wet disc full hydraulic brakes
- Parking brake, electric
- Lubed for life driveshafts
- Hydrostatic transmission with electronic control
- Operator modes (TC, Hystat, Single Pedal and Ice)
- Directional shift aggressiveness (fast, medium, slow)
- Auto Wheel Torque control, adjust wheel torque
- Creeper control, adjust ground speed
- Single plane cooling package, wide 6 fins per inch density
- Hydraulically driven demand cooling fan
- Scheduled Oil Sampling (S·O·S℠) port, engine, coolant, transmission

HYDRAULICS
- Automatic lift and bucket kickouts, adjustable in-cab
- Bucket and fork modes, adjustable in-cab
- Cylinder damping at kickout and mechanical end stops
- Fine mode control (fast, medium, slow)
- Hydraulic response setting (fast, medium, slow)
- Hydraulic diagnostic connectors and
- S·O·S ports
- Hydraulic sight gauge, visible
- Load sensing hydraulics and steering
- Seat mounted hydraulic joystick controls
- Cat Payload 250 hours of Demo

ELECTRICAL
- Alternator, 115-amp, heavy duty
- 12V power supply in cab (2)
- Batteries, 1,000 CCA (2) 24-volt system, disconnect switch
- Back up alarm
- Emergency shutdown switch
- LED rear stop and turn lights
- Heavy duty gear reduction starter
- Product Link™ Elite
- Remote jump start post
- Resettable main and critical function breakers
- Roading lights front and rear

OTHER
- Large-access enclosure doors with adjustable close/open force
- Parallel lift loader linkage
- Recovery hitch with pin
- Remote mounted lubrication points
- Lockable compartments
- 1000-hour Service Intervals (after initial 500)

OPTIONAL EQUIPMENT

OPERATOR ENVIRONMENT
- Joystick steering – 25 mph (40 kph) capable
- Radio packages
- Telescoping Steering Column
- Deluxe seat – fully adjustable fabric air suspension seat with mid seat backrest
- Premium seat – fully adjustable leather and fabric air suspension with high backrest and air lumbar support. Seat is heated and ventilated on bottom cushion and backrest.
- Rear Object Detection
- Multi View Camera
- Front View Camera, roof mounted
- Heated external Mirrors (2)
- Electrically adjustable and heated external mirrors (2)
- Internal Mirrors (2)
- Sunscreen, front and rear
- Windshield Washing Platform
- Powered precleaned for cab air
- Cab guarding

POWER TRAIN
- Differential, limited slip, rear
- Powertrain Guarding
- Tire Pressure Monitoring (TPM)
- Range of Tire Options
- Fenders (extended cover and full coverage)

HYDRAULICS
- Auxiliary flow, third and fourth function
- Connect Under Pressure Disconnects
- Ride Control System, adjustable via display
- Autolube, integrated in display
- Biodegradable Oil
- Debris packages (low, medium, high)

ELECTRICAL
- Cold start package
- Ether starting aid, block heater and additional batteries, 1,000 CCA (4 total)
- Lights, auxiliary, halogen or LED with engine and DEF compartment lights
- Beacon light, strobe
- Light Guarding

OTHER OPTIONAL EQUIPMENT
- Linkage, high lift
- Coupler, (Fusion and ISO 23727:2009)
- Heavy Counterweight
- Aggregate Counterweight
- Cat Payload Printer
- Cylinder Guarding
- Range of Work Tool Attachments

NOTE: Not all features are available in all regions.

For more complete information on Cat products, dealer services, and industry solutions, visit us on the web at **www.cat.com**

© 2023 Caterpillar
All rights reserved

Materials and specifications are subject to change without notice. Featured machines in photos may include additional equipment. See your Cat dealer for available options.

CAT, CATERPILLAR, LET'S DO THE WORK, their respective logos, "Caterpillar Corporate Yellow," the "Power Edge" and Cat "Modern Hex" trade dress as well as corporate and product identity used herein, are trademarks of Caterpillar and may not be used without permission.

AEHQ8453 (12-2023)
Build Number: 14A
(N Am, EU, ANZP, Chile, Turkey)